Female contacts

HI-FLEX REF. 14106

- The Hi-Flex female contact is designed to offer a stable insertion force and low contact resistance over a larger number of mating cycles.
- More resistant to damage by bent or angled pins, primarily on test devices.

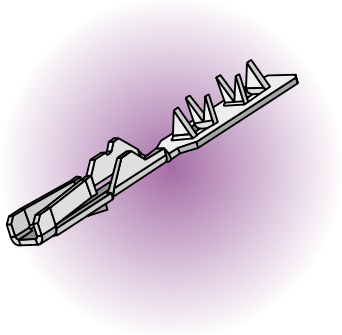

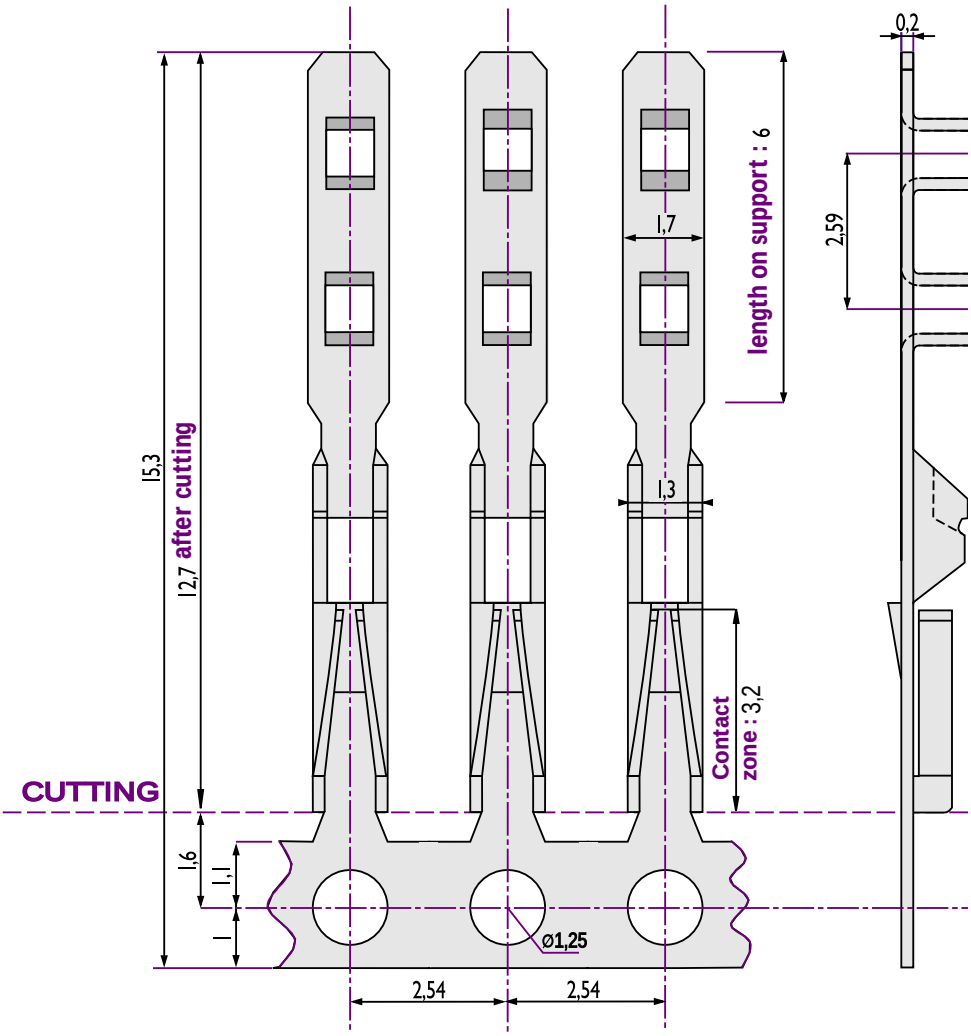

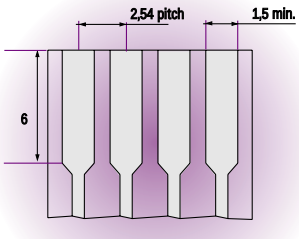

Contact lay out

Dimensions in mm

REF.	PLATING	REEL
14106-12	Tin plated	35 000 contacts
14106-32	Selective gold plated	35 000 contacts
OTHER PLATINGS ON REQUEST		